HFP100
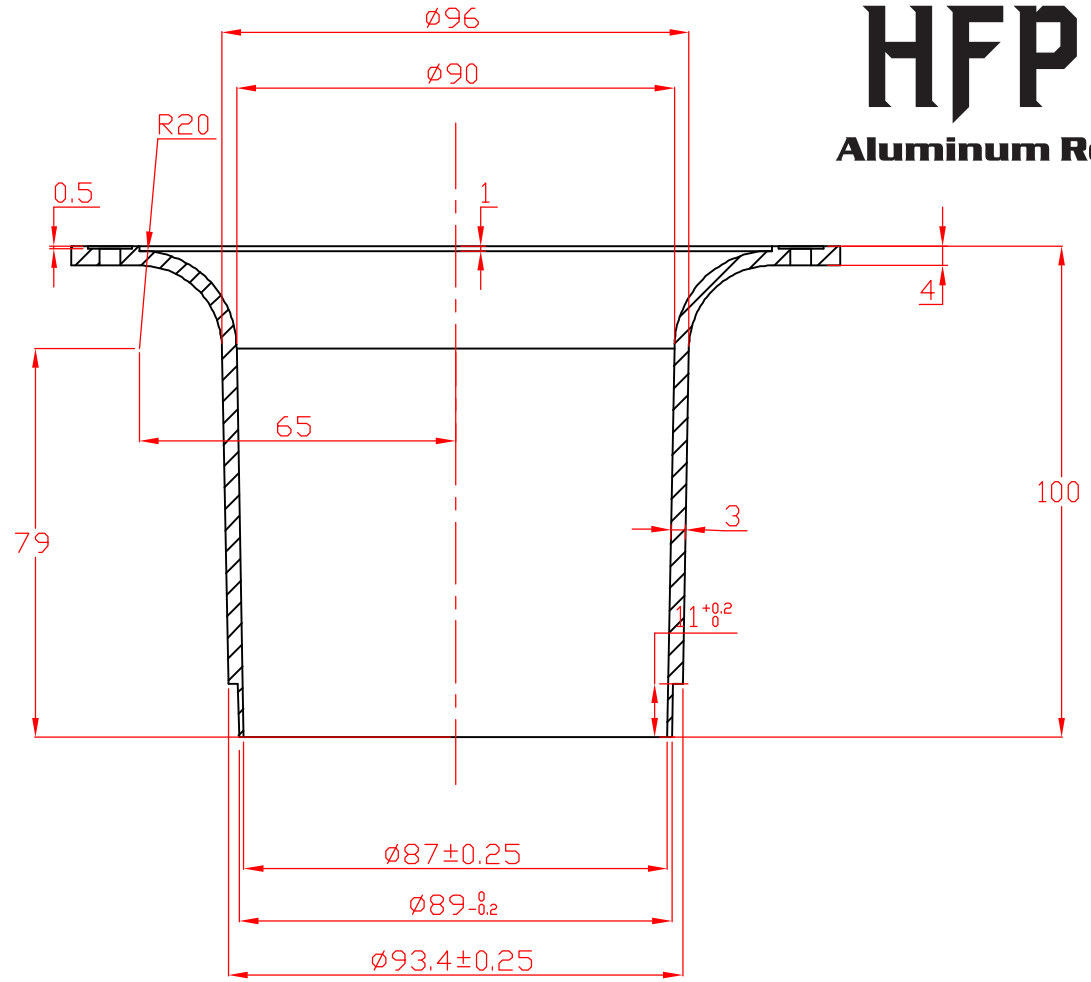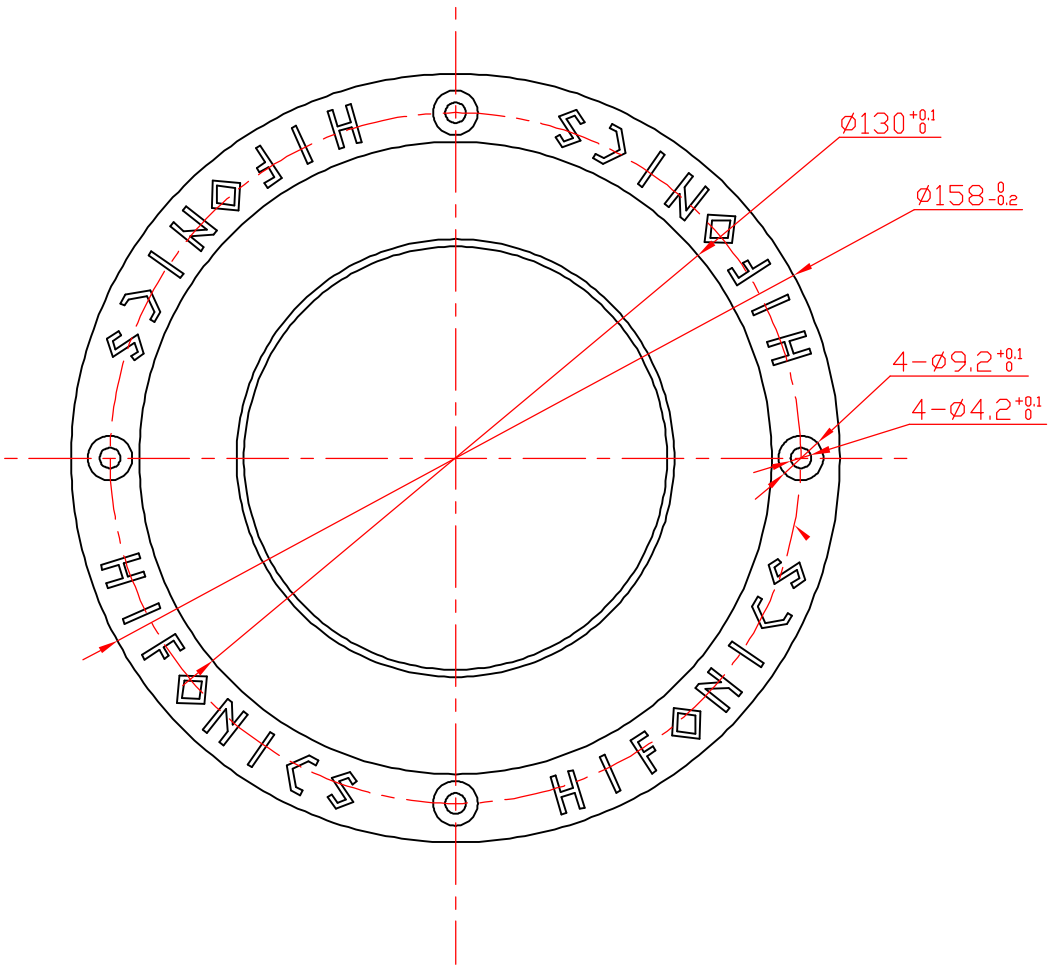
Aluminum Reflex Port